EXPERIMENT 3

OPAMP APPLICATIONS

3.1 Objectives

In this experiment,

1. Basic characteristics of op-amps will be examined.
2. Some op-amp applications such as Schmitt trigger and comparator circuits are implemented.

3.2 Equipment List

1. Signal Generator, DSO, DC Power Supply, Multi-meter.
2. Resistors (1 kΩ, 2 x 2.2 kΩ, 4.7 kΩ,10 kΩ, 10 kΩ POT)
3. Op-amp (LM358)
4. LED

3.3 Preliminary Work

1. Study working principles and circuit schematics of comparator and Schmitt trigger circuits.
2. Explain the meaning of offset voltage in comparator circuits.
3. Simulate the circuit in Fig. 1. and find V_{ref}. You can use any simulation software.

3.4 Experimental Procedure

1) Construct the circuit in Fig. 1. ($V_{cc} = \pm 12$ V)

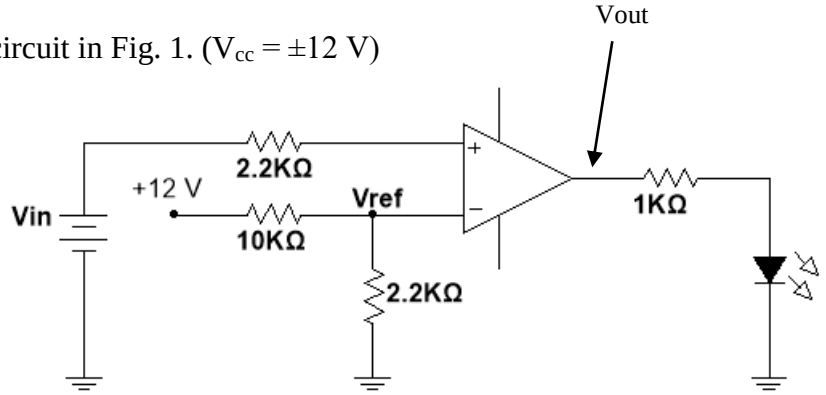

Figure 1. Schmitter Trigger Circuit

a) Measure and record V_{ref} value. When V_{in} is varying between 1V and 3V, V_{ref} is constant or varying? Why? Compare with the value found in preliminary work step 3.

b) Vary input voltage V_{in} from 1 V to 3V in steps of 0.2 V and observe the output for each V_{in} values, record these values into Table 1. Examine how this circuit works.

Table 1. Output voltage levels for different input voltages.

V_{in}	**1V**	**1.2V**	**1.4V**	**1.6V**	**1.8V**	**2V**	**2.2V**	**2.4V**	**2.6V**	**2.8V**	**3V**
V_{out}											

2) Construct the circuit in Fig. 2 and apply the sinusoidal signal as 10 V amplitude and 1 kHz frequency. Observe V_{in} versus V_{out} with DSO (CH_1 should be connected to V_{in} and CH_2 should be connected to V_{out} in XY mode of DSO). Observe the change of slope for different R_{ref} values. Record these figures for min., medium and max. levels of R_{ref}.

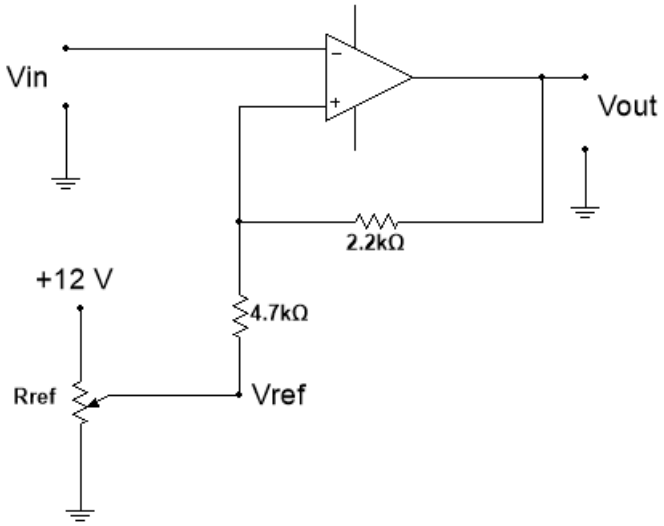

Figure 2. Comparator Circuit

3) Is there any change on the slope if -12 V is used instead of +12 V which is applied to R_{ref}?

LM 358 Pin Diagram:

